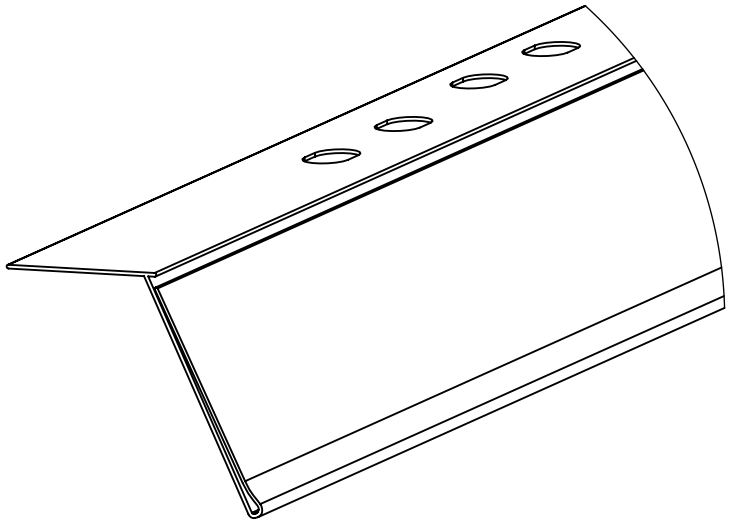

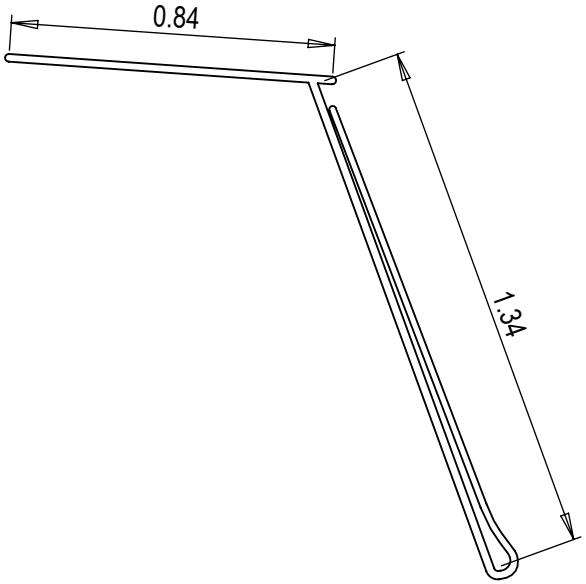

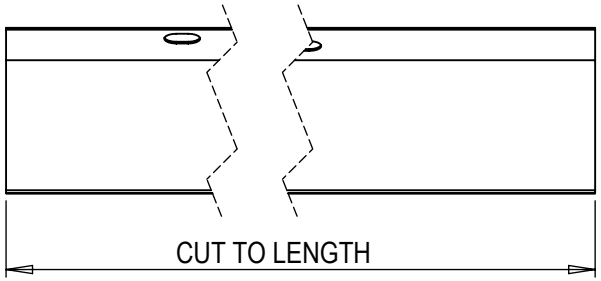

DESC.
1 1/4" BASE DECK SIGN HOLDER

PROPRIETARY AND CONFIDENTIAL	MATERIAL **PVC**	**CLEAR**	SIZE **A**	PART NO: **1104 -**	REV
THE INFORMATION CONTAINED IN THIS DRAWING IS THE SOLE PROPERTY OF E&C CUSTOM PLASTICS, INC. ANY REPRODUCTION IN PART OR AS A WHOLE WITHOUT THE WRITTEN PERMISSION OF E&C CUSTOM PLASTICS, INC. IS PROHIBITED.	NAME DSC	DATE **7/27/2020**		SHEET 1 OF 1

5 4 3 2 1